wesbeam
building better wood

e-joist
engineered floor joists

Site Installation Guide

Site Checklist **Stop and read this now.**

Tick box when checked.

Floor Joist Layout ☐

If a floor joist design/layout was done, was a site copy of the layout provided with the joists, Beams and Bracket delivery?

Check Delivery ☐

Check the delivery, see that all materials were supplied and free of any damage.

Site Storage ☐

Ensure that the Joists when received on site are stored in a flat dry area and kept clear of moisture.

Cuts, Holes and Notching in Bearers and joist ☐

Ensure that cutting and notching of e-joists comply with Wesbeam recommendations and that cutting and notching solid members comply with Australian Standards. AS1684.2:2021 Figure 4.1 Notching and cutting in Beams, Bearers, Joists and Rafters.

Bracket Check ☐

- Are all of the brackets installed as per the bracket manufacturer's requirements?
- Check that Joists and Beams are secure in the bracket and do not allow any movement. If the Joists or Beams are not secure they may cause floor squeaks.
- Use the correct bracket nails supplied with the brackets. If the installer uses nail gun nails to secure the brackets the installer must check with the bracket manufacturer for their recommendations on the type and quantity of nails required.
- Phone MiTek on 03 8795 8888 or visit www.MiTek.com.au
- Phone Pryda on 03 9706 5488 or visit www.pryda.com.au

Notching and over Cutting e-joist ☐

e-joist top and bottom flanges can be notched when fixing in to steel beams. The flanges can NOT be over cut in length or depth . Notches can be a maximum of 12mm in depth.

Temporary and Permanent Blocking ☐

Before using the structure as a walkway ensure all temporary blocking, bracing must be installed with joists and beams securely fixed into place.

Ensure the blocking and bracing requirements for the project are understood.

Supports/Bearings ☐

Ensure that supports are level and structurally stable in their own right prior to placing any joists.

Ensure that bearing and fixing requirements to beams and wall plates are known.

Services and Waste Locations ☐

We suggest that the carpenter discuss with the builder and other relevant trades the location of service ducts, air conditioning and waste locations to ensure joists and supporting beams clear the required areas.

Final Check ☐

When the floor system is finished and flooring installed – Nail check from under the floor. Check that any nails that may have skewed beside a joist/beam or bracket are removed or given clearance to reduce any chance of creating a floor squeak. The nail check will likely stop any nails that have missed or skewed beside a joist or bearer creating squeaks in the floor.

Material Safety Data Sheets ☐

MSDS information on the LVL flange and the OSB web materials is available at www.wesbeam.com

Technical References ☐

Refer to e-joist installation brochure.

e-beam design brochure.

e-joist design brochure.

Contact: **T** 1300 356 460 wesbeam@wesbeam.com
www.wesbeam.com

Storage on Site

e-joists when received on site must only be stacked in the upright position to avoid any damage during storage or handling. Only stack on level bearers (3.0m spacing max) providing a ground clearance of at least 150mm. e-joists are not to be place over ponded water and are to be kept as dry as practicable.

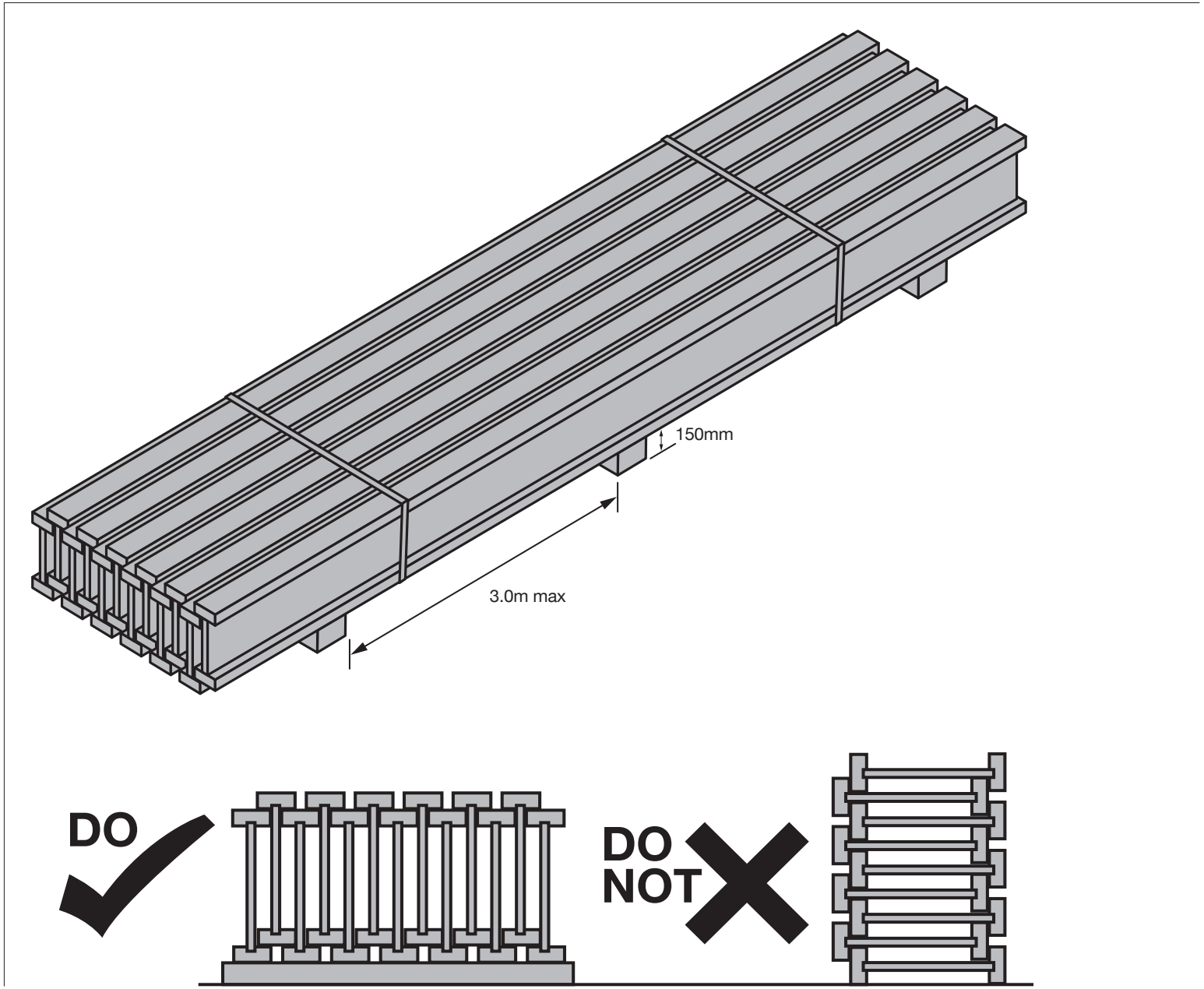

e-joist Construction Information

Upper Floor Framing (for clarity, flooring not shown under walls)

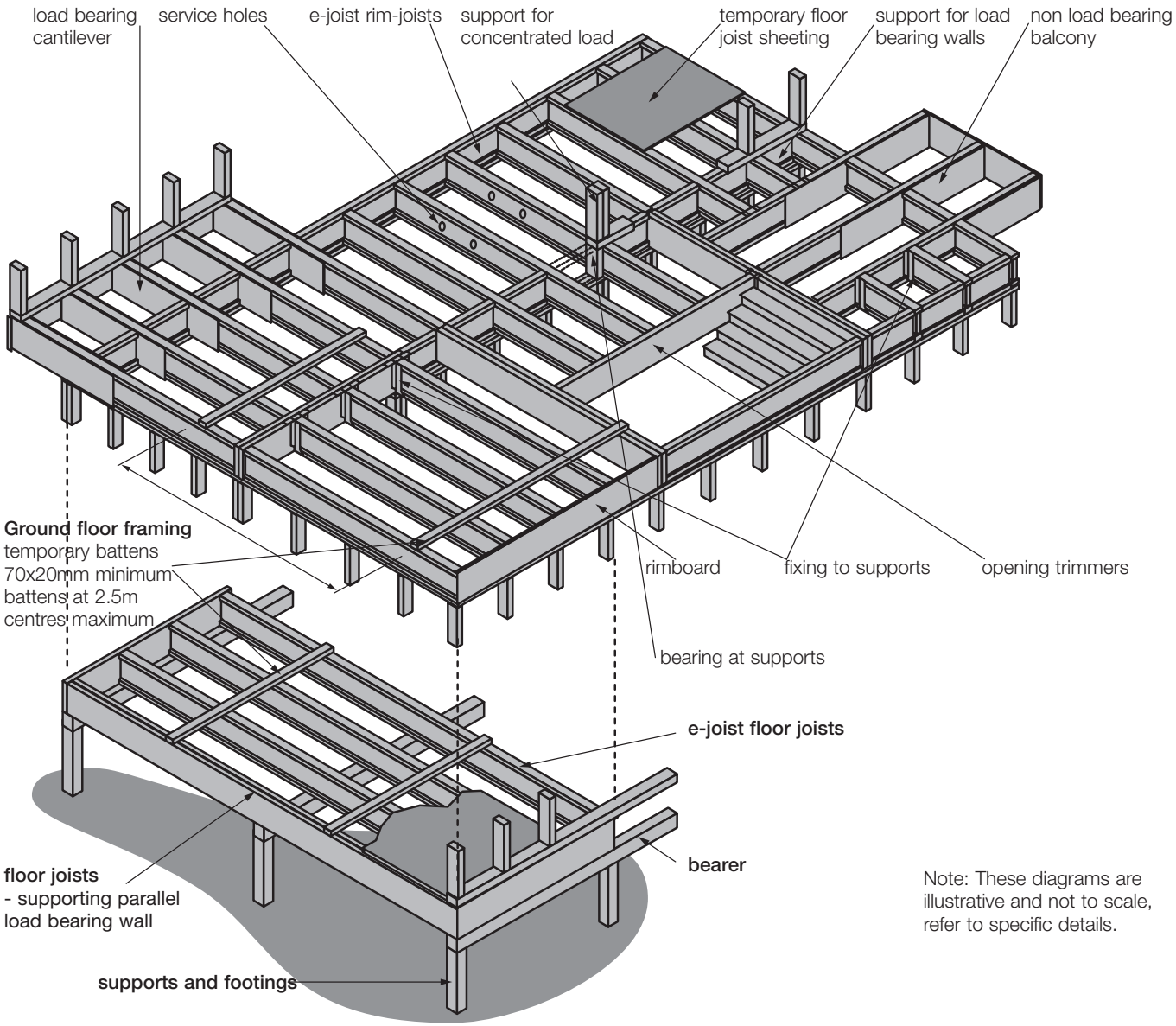

Note: These diagrams are illustrative and not to scale, refer to specific details.

e-joist Installation Details

Fixing to Supports

MiTek Installation Notes

1. Refer to MiTek's product literature for hanger installation details – incorrect installation can lead to unsafe or unsatisfactory performance.
2. Fix hanger to bearer or wall plate by filling all holes using MiTek ø3.75 x 40mm reinforced head galvanized nails.
3. Fix bottom e-joist flange using 2 x ø3.75 x 40mm reinforced head nails. Select one dimple each side of the e-joist which will allow the 40mm nail to be driven fully home at a 45° angle.

Pryda Installation Notes

1. Refer to Pryda's product literature for hanger installation details – incorrect installation can lead to unsafe or unsatisfactory performance.
2. Fix hanger to bearer or wall plate by filling all holes using ø3.75 x 40mm galvanized Pyda Timber Connector nails.
3. Sit joist in bracket and fix joist tight using a 30 x 6 gauge bugle-head or wafer-head wood screws.

e-joist hanger installation

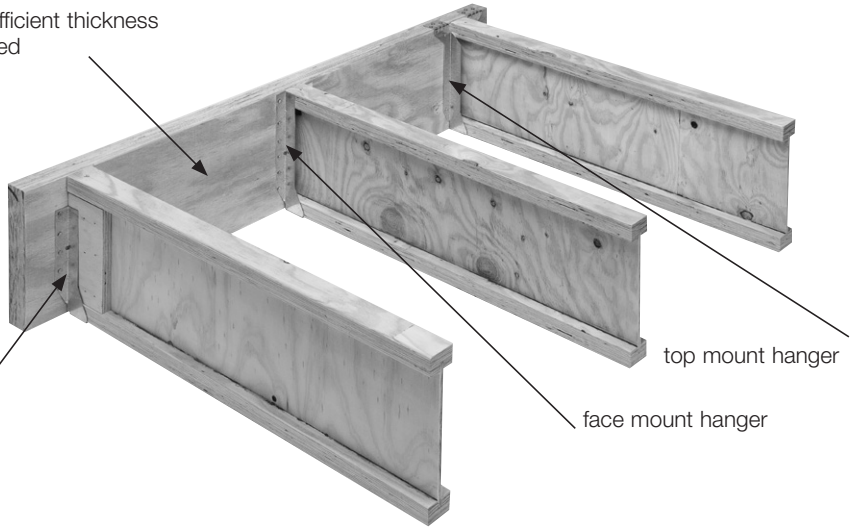

MiTek I-Joist Hanger Guide

e-joist	Face Mount Hanger		Top Mount Hanger	
	Hanger Code	Face Nails to Bearer	Hanger Code	Top Nails to Bearer
ej20045	IBHF20050	8	IBHT20050	6
ej24045	IBHF24050	10	IBHT24050	6
ej24063	IBHF24065	10	IBHT24065	6
ej24090	IBHF24090	10	IBHT24090	6
ej30045	IBHF30050	12	IBHT30050	6
ej30063	IBHF30065	12	IBHT30065	6
ej30090	IBHF30090	12	IBHT30090	6
ej36063	IBHF36065	14	IBHT36065	6
ej36090	IBHF36090	14	IBHT36090	6

Pryda I-Joist Hanger Guide

e-joist	Face Mount Hanger			Top Mount Hanger		
	Hanger Code	Fasteners		Hanger Code	Fasteners	
		Joist Screw	Face Nails to Bearer		Joist Screw	Face Nails to Bearer
ej20045	LF190/50	1	8	LT200/50	1	6
ej24045	LF235/50	1	10	LT240/50	1	6
ej24063	LF235/50	1	10	LT240/65	1	6
ej24090	LF235/90	1	10	LT240/90	1	6
ej30045	LF297/50	1	12	LT300/47	1	6
ej30063	LF297/50	1	12	LT300/65	1	6
ej30090	LF290/90	1	12	LT300/90	1	6
ej36063	LF340/65	1	14	LT356/65	1	6
ej36090	LF350/90	1	14	LT360/90	1	6

Notching and over cutting e-joists

Flange Notching

e-joist top and bottom flanges can be notched when fixing in to steel beam. The flanges can be notched to a max of 12mm. Do not over cut in depth or length when notching the joists.

Notch <12mm deep – OK

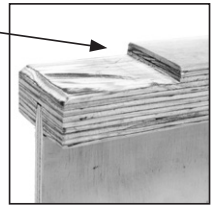

Chamfer within support – OK

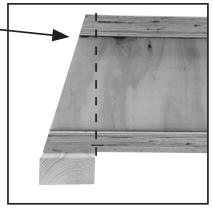

Do not overcut flange

Do not chamfer beyond support

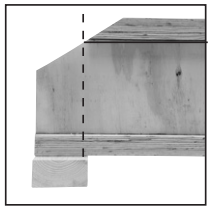

Do not overcut >12mm deep

Do not chamfer beyond support

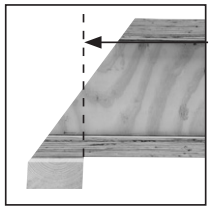

Seek technical advice before chamfering the joists beyond the bearing supports as plywood reinforcing may be required.

Notching and over cutting e-joists

Web Cutting

e-joist webs can be cut to accommodate the top flange of a steel beam provided web stiffeners are installed in contact with bottom flange and fixed.

Flange notching

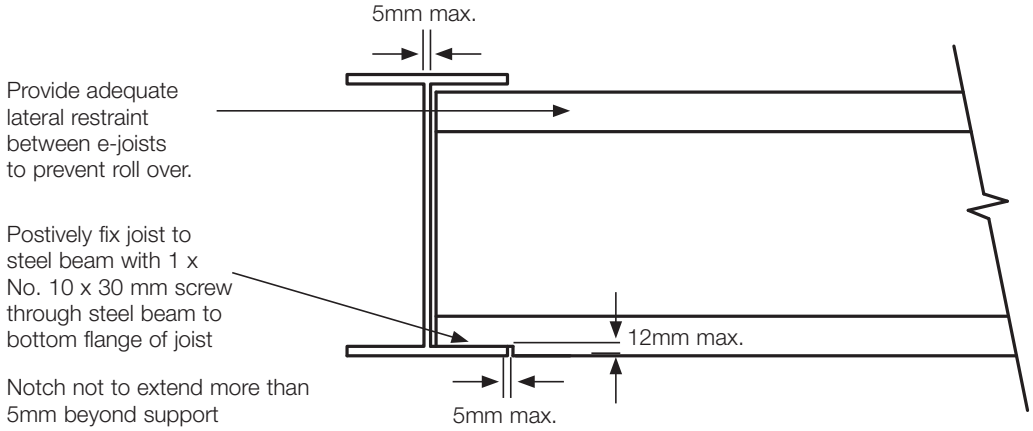

Web cutting

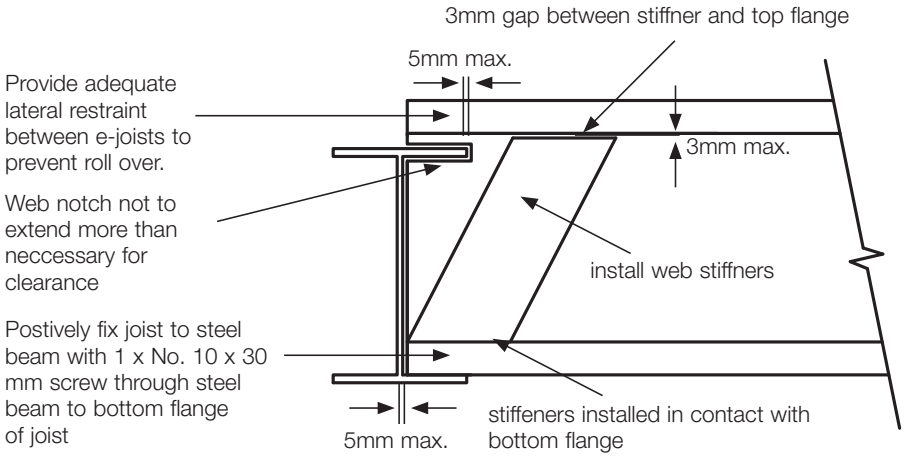

e-joist to Steel Beam Connections

Joist Fixing to Steel Beams or Masonry

e-joist fixing to steel beams (or masonry) using top mount hangers

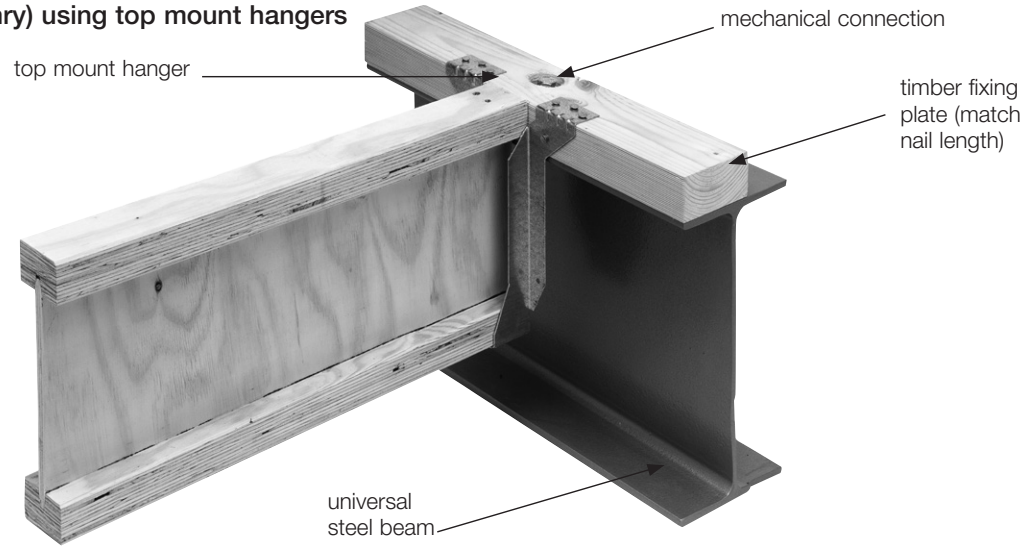

e-joist fixing to steel beams (or masonry) using face mount hangers

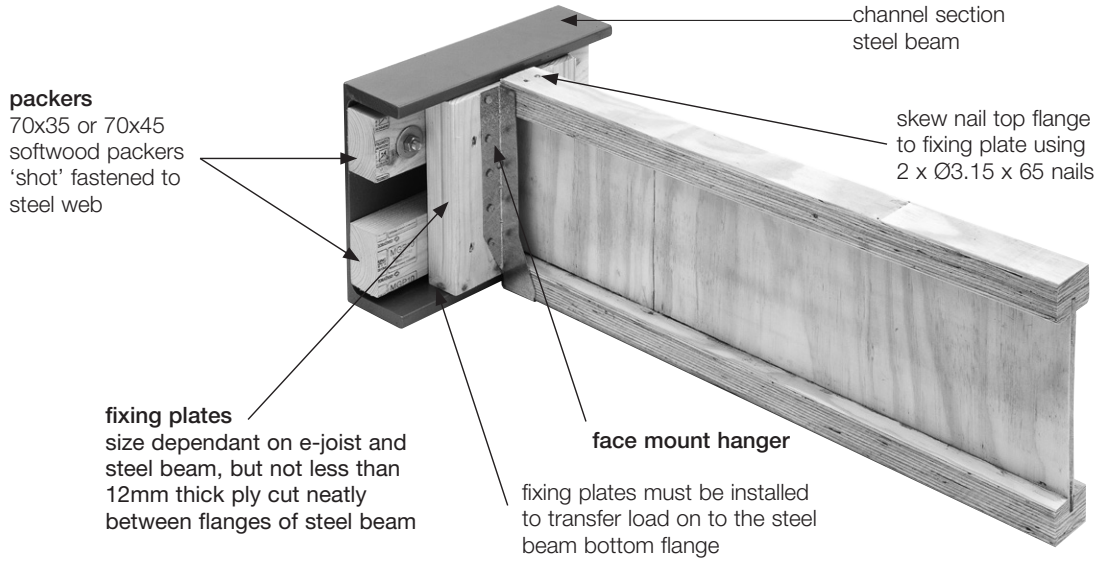

e-joist Installed Plumb and Straight

Install e-joists straight

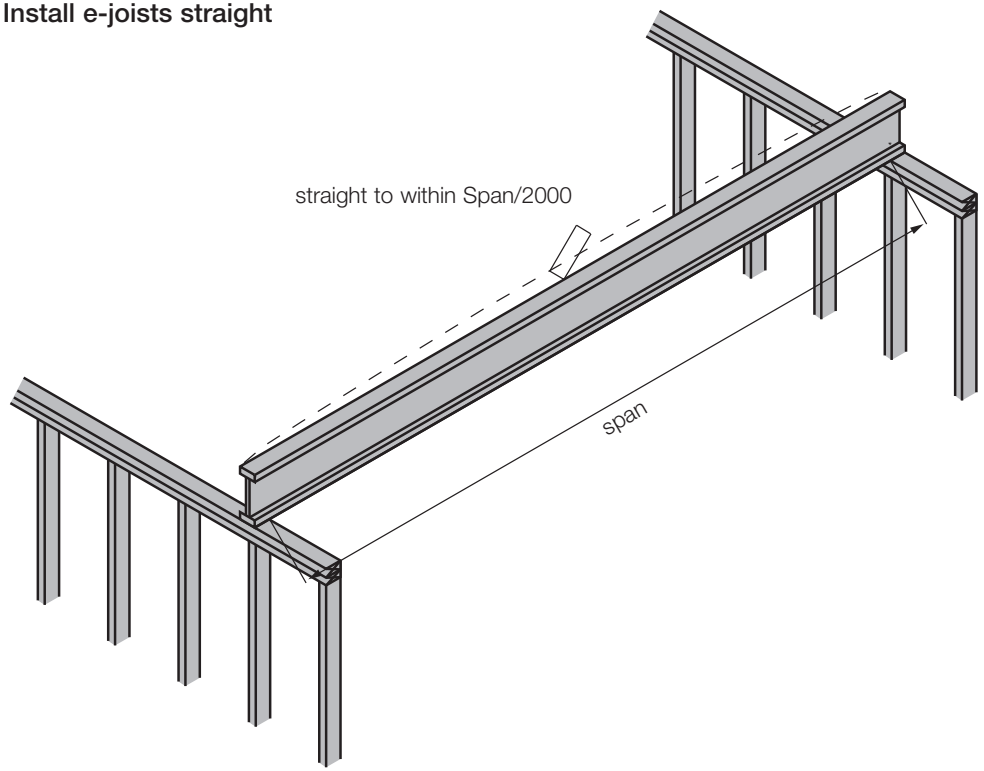

Install e-joists plumb

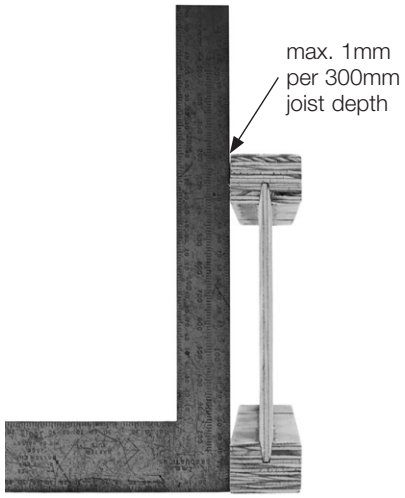

Nailing of Joists to Supports

Skew nailing

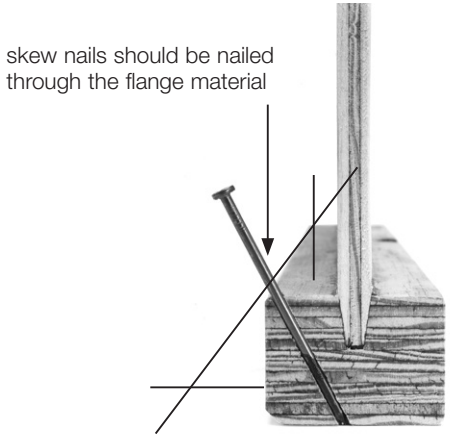

Nailing at supports

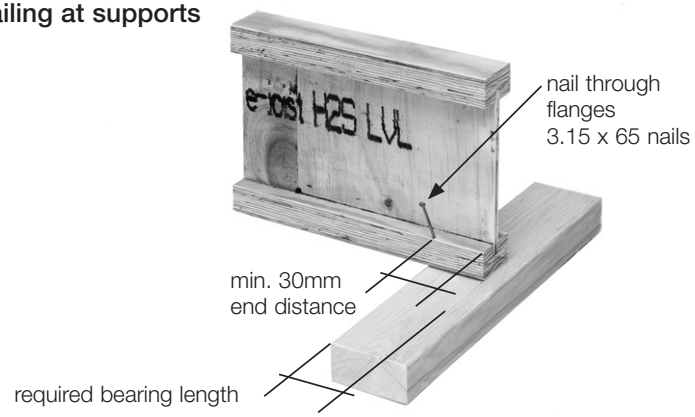

e-joist End Blocking Options

Temporary and Permanent Bracing and Blocking

Temporary Blocking

Temporary blocking during construction prevents joists rolling over while the sheet floor is being installed.

Minimum Temporary Blocking Requirements are: the outer three joists (2 spaces) and intermediate joists (2 joist spaces) at no more than 3.6m centres using solid or e-joist floor blocking.

Temporary battens must be also used during construction. Joists must be restrained at a maximum of 2.5m centres with battens (70 x 20mm min) fixed back to points of rigidity. Temporary battens must be installed prior to walking on open joists or attempting to lay flooring.

Note: Do not walk on or load floor joists until all blocking, rimboards, temporary bracing, hangers or nailing are installed.

Blocking/Bracing: External Load Bearing and Bracing Walls

e-joist floor blocking

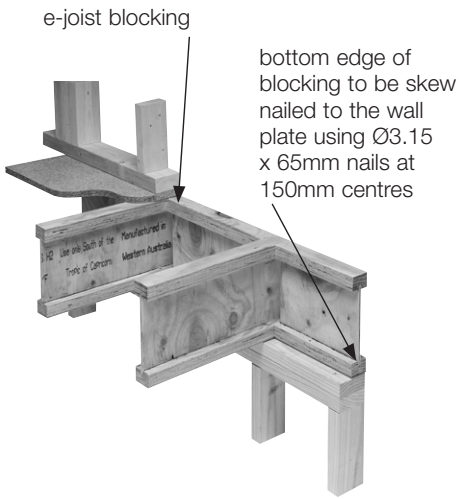

note: use for sub-floor and upper floor blocking on either single or multi-storey construction

17mm rimboard

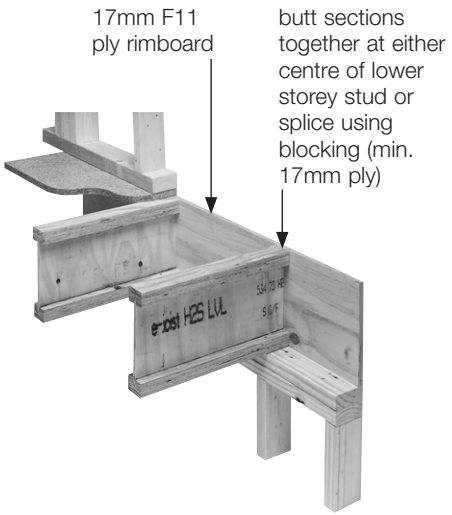

note: use rimboard for the upper storey of two storey construction or the sub-floor for single storey construction

Double 17mm rimboard

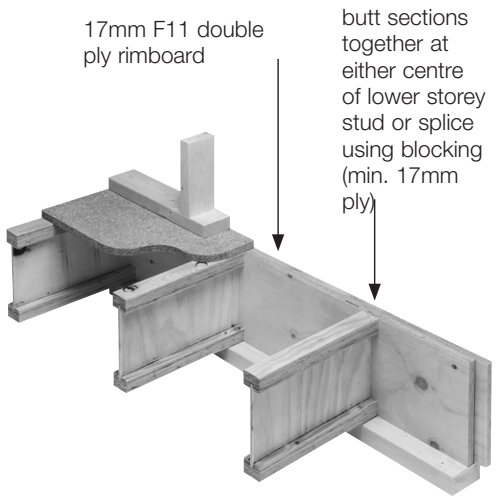

note: double rimboards for the lower storey of two storey construction

e-joist rim-joist (only suitable for 45mm flange width e-joists on 90mm plates)

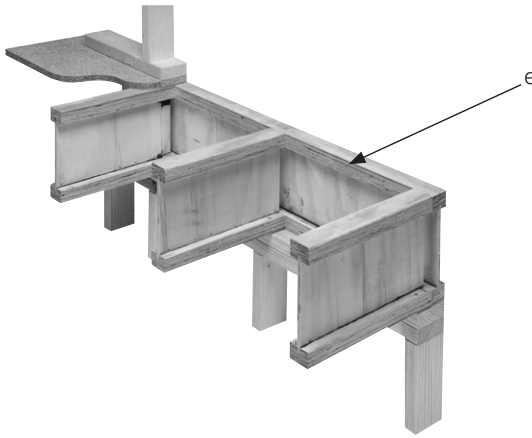

note: nail rim-joist to end of the top and bottom e-joist flanges using 1 x Ø3.15 x 75mm nail

Temporary and Permanent Blocking

Temporary and Permanent Bracing and Blocking

Permanent Blocking / Bracing

Permanent Blocking / Bracing provides lateral resistance to transfer the “racking” loads, experienced by the house during wind events, through the floor to the lower bracing system.

If full blocking of exterior walls is undertaken, using one of the following methods shown in diagrams D5-D7, with temporary blocking as described above to all internal walls, then no further lateral bracing calculation is required – **this is highly recommended.**

Typical tie down connection details for uplift and to the ends of upper floor bracing walls detailed in AS1684 can also be used with e-joists except that **bolting through flanges is not permitted.**

e-joist floor bracing

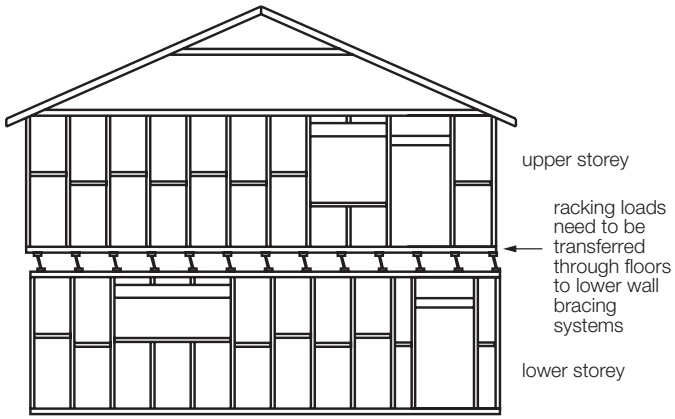

Temporary and permanent blocking

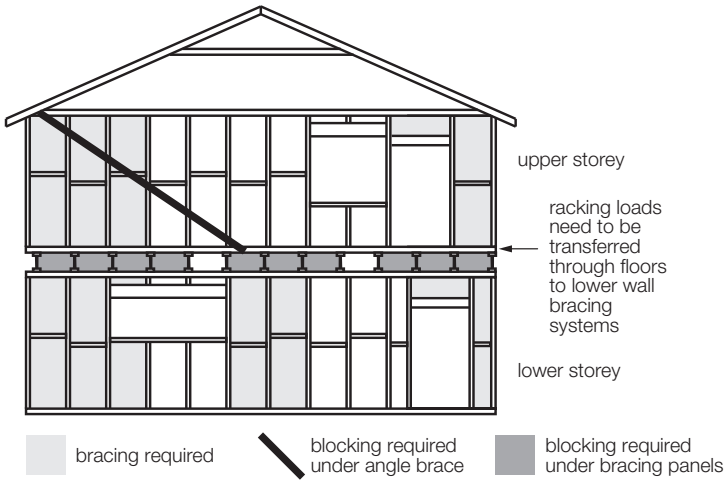

any transfer of a vertical load or bracing wall needs to be transfered to lower storey walls to enable the loads to flow through to the building foundations

e-joist Installation Details

Bracing and Tie Down

All bracing and tie down to be designed in accordance with AS1684.

Fixing of Flooring

Fixings for floors shall be in accordance with AS1684 and manufacturer’s recommendations. It is recommended that flooring adhesive be used with sheet flooring.

Blocking/Bracing: Internal Load Bearing and Bracing Walls

e-joist floor blocking

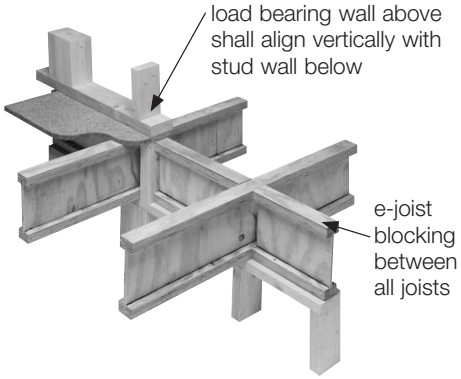

Support of concentrated loads

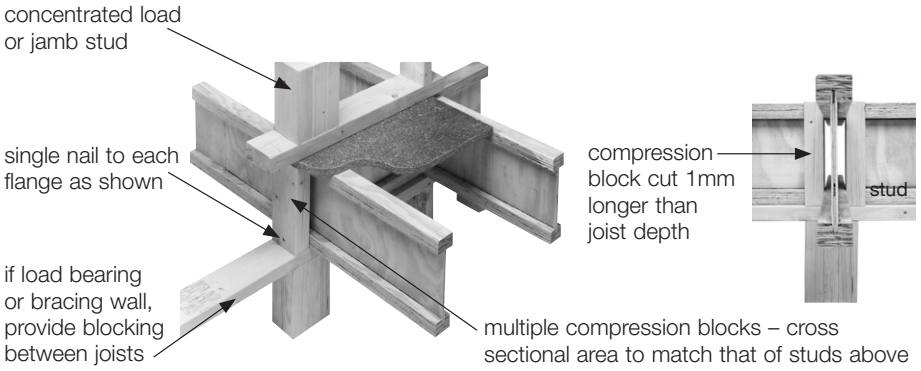

e-joist Web Stiffener Installation

'Install web stiffeners when transferring vertical loads through the floor joists.

Support Details

Web stiffener installation

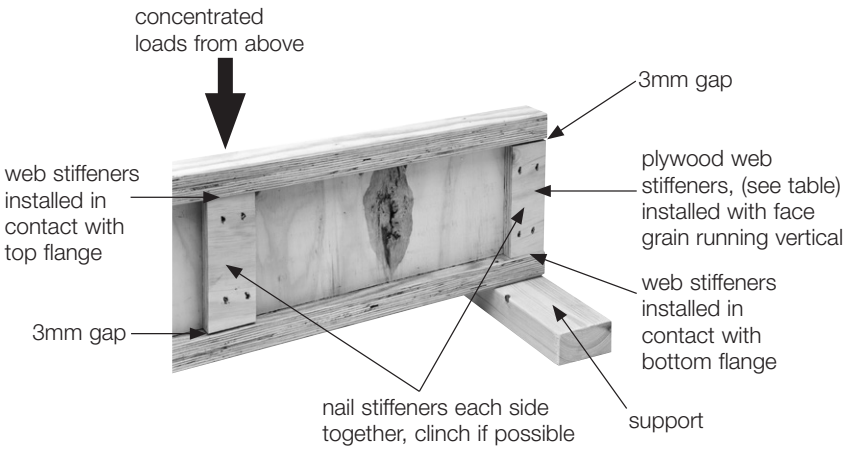

e-joist Flange Width	Stiffener	Nail Length
45mm	17 x 60mm ply	65mm
63mm	27 x 60mm ply	65mm
90mm	2/19 x 60mm ply	90mm
e-joist Depth	**Stiffener Nailing Requirements**	
200 240	3 x ø3.15 nails each side clinched where possible	
300 360	4 x ø3.15 nails each side clinched where possible	

Bearing at Supports

Bearing at Supports

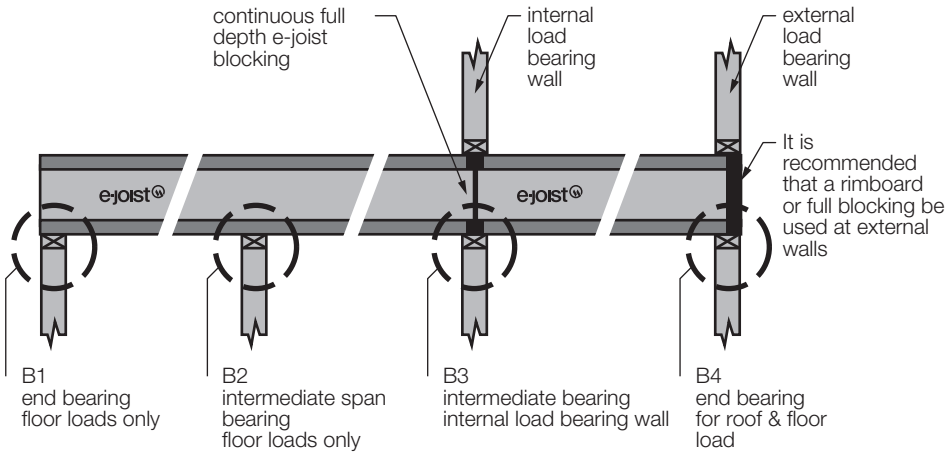

Note:
1. "(s)" – the value in the brackets is the minimum required bearing length if web stiffeners are installed

Detail B1	End Supports - single or continuous spans			
Minimum Bearing	35			
Detail B2	**Intermediate Supports – continuous spans**			
	Joist Type	**Joist Spacing**		
		300	**450**	**600**
Minimum Bearing	All 200, 240, 300 and 360 e-joists	45	45	70
Detail B3	**Intermediate Supports**			
Provide minimum bearing as for intermediate supports (B2) and install continuous full depth e-joist blocking to transfer roof and wall loads to supports				
Detail B4	**End Supports with Rimboard or full blocking**			
Minimum Bearing	35			

Detail B4	End Supports with no Rimboard or full blocking (just minimum blocking)				
	Roof Material	**Joist Type**	**Joist Spacing**		
			400	**450**	**600**
Minimum Bearing	Sheet Roof	All	45	45	65 (45s)
	Tile Roof	All 200, 240, 300 e-joists	70	70	90 (65s)
		ej36063	70	70	90 (65s)
		ej36090	70	70	95 (70s)

Services Hole Guide

1 All holes to be considered before cutting

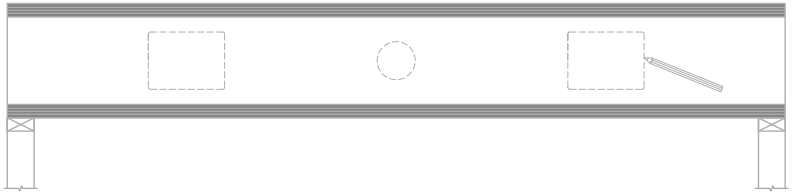

2 Maximum of 3 holes per span

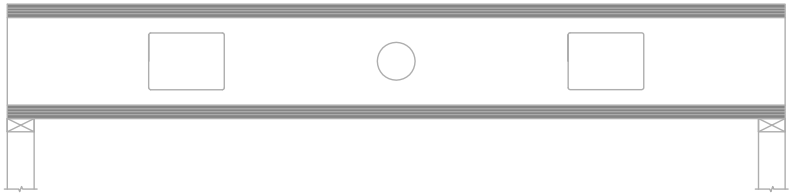

*All holes <75mm are excluded from this total

3 Grouping of holes

*Smaller holes can be grouped into a larger hole subject to the maximum size being within the service hole guide limits

4 Don't cut the blue flanges

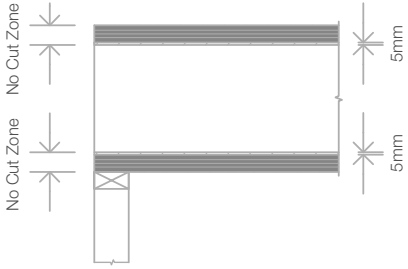

*Flanges can be notched at supports as per installation guide, but no cuts on or within 5mm of the flange are allowed

5 Distance from support

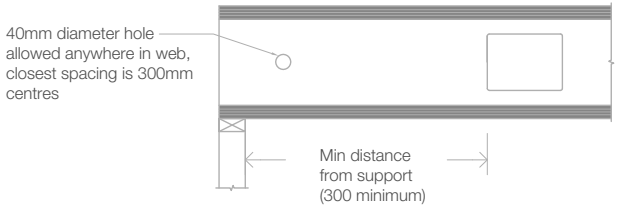

*Refer to service hole guide for minimum distance from supports

6 Minimum hole spacing

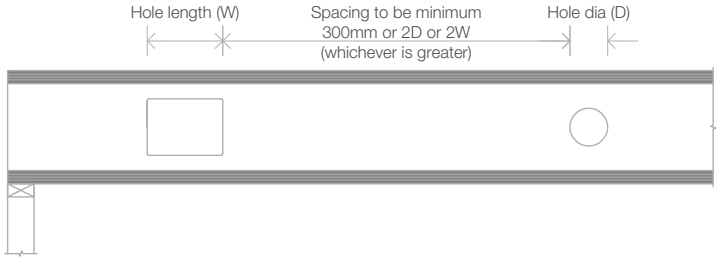

*Minimum spacing between holes must be at least 300mm or twice the diameter or length of the largest opening (whichever is greater)

7 Position and neatness

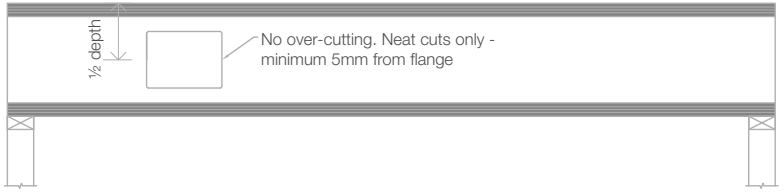

*Holes recommended to be mid height of joist

8 Cantilever holes

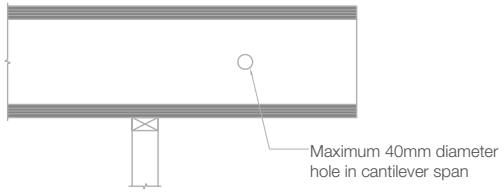

Services Hole Guide

Floor Joist Applications in Domestic Residences ONLY

Note:

1. Distance from support is measured from the face of the support to the centre of a circular hole or to the edge of a square or rectangular hole.
2. Web hole locations can be interpolated for intermediate spans.
3. Web hole depth may be limited by depth of joist and 5mm clearance requirement to flange.
4. NS - Not Suitable

e-joist Section Code	Installed Span	Circular or Square Holes							Rectangular Holes				
									Height x Width (mm)				
		ø75	ø100	ø125	ø150	ø175	ø200	ø250	125 x 250	150 x 300	175 x 350	200 x 400	250 x 500
		Minimum distance from support – external or internal							Minimum distance from support – external or internal				
ej20045	3.0	0.30	0.30	0.51	NS	NS	NS	NS	0.51	NS	NS	NS	NS
	4.0	0.30	0.41	1.01	NS	NS	NS	NS	1.01	NS	NS	NS	NS
	5.0	0.30	0.91	1.51	NS	NS	NS	NS	1.51	NS	NS	NS	NS
ej24045	3.5	0.30	0.30	0.30	0.40	NS	NS	NS	0.30	0.40	NS	NS	NS
	4.5	0.30	0.30	0.30	0.90	NS	NS	NS	0.30	0.90	NS	NS	NS
	5.5	0.30	0.30	0.80	1.40	NS	NS	NS	2.17	2.24	NS	NS	NS
ej24063	4.0	0.30	0.30	0.30	0.66	NS	NS	NS	0.30	0.66	NS	NS	NS
	5.0	0.30	0.30	0.55	1.16	NS	NS	NS	0.55	1.16	NS	NS	NS
	6.0	0.30	0.45	1.05	1.66	NS	NS	NS	2.48	2.53	NS	NS	NS
ej24090	4.5	0.30	0.30	0.32	0.92	NS	NS	NS	0.32	0.92	NS	NS	NS
	5.5	0.30	0.30	0.82	1.42	NS	NS	NS	0.82	1.42	NS	NS	NS
	6.5	0.30	0.72	1.32	1.92	NS	NS	NS	1.32	1.92	NS	NS	NS
ej30045	4.5	0.30	0.30	0.30	0.30	0.30	0.66	NS	0.30	0.30	0.65	0.91	NS
	5.5	0.30	0.30	0.30	0.30	0.60	1.16	NS	1.27	1.66	1.82	1.91	NS
	6.5	0.30	0.30	0.30	0.45	1.06	1.66	NS	2.90	2.90	2.92	2.91	NS
ej30063	4.5	0.30	0.30	0.30	0.30	0.30	0.67	NS	0.30	0.30	0.30	0.67	NS
	5.5	0.30	0.30	0.30	0.30	0.56	1.17	NS	0.30	0.96	1.39	1.58	NS
	6.5	0.30	0.30	0.30	0.46	1.06	1.67	NS	2.39	2.53	2.60	2.64	NS
	7.0	0.30	0.30	0.30	0.71	1.31	1.92	NS	3.16	3.17	3.17	3.17	NS
ej30090	5.0	0.30	0.30	0.30	0.30	0.33	0.93	NS	0.30	0.30	0.33	0.93	NS
	6.0	0.30	0.30	0.30	0.30	0.83	1.48	NS	0.30	0.30	0.83	1.48	NS
	7.0	0.30	0.30	0.30	0.73	1.33	1.93	NS	0.30	0.73	1.33	1.93	NS
	7.5	0.30	0.30	0.37	0.98	1.58	2.18	NS	0.30	0.98	1.58	2.18	NS
ej36063	5.0	0.30	0.30	0.30	0.30	0.30	0.30	0.68	0.30	0.30	0.30	0.30	0.68
	6.0	0.30	0.30	0.30	0.30	0.30	0.30	1.18	0.30	0.30	0.38	1.00	1.47
	7.0	0.30	0.30	0.30	0.30	0.30	0.48	1.68	0.30	1.40	1.91	2.15	2.39
	7.5	0.30	0.30	0.30	0.30	0.30	0.73	1.93	0.30	2.31	2.56	2.70	2.85
ej36090	5.0	0.30	0.30	0.30	0.30	0.30	0.30	0.69	0.30	0.30	0.30	0.30	0.69
	6.0	0.30	0.30	0.30	0.30	0.30	0.30	1.19	0.30	0.30	0.30	0.30	1.19
	7.0	0.30	0.30	0.30	0.30	0.30	0.49	1.69	0.30	0.30	0.30	0.49	1.69
	8.0	0.30	0.30	0.30	0.30	0.38	0.99	2.19	0.30	0.30	0.30	1.33	2.19

© Wesbeam Pty Limited
ABN 89 004 268 017
WESB0802 July 2026

WESTERN AUSTRALIA
190 Pederick Road
Neerabup | WA | 6031
T 08 9306 0400
F 08 9306 0444
E sales.wa@wesbeam.com

QUEENSLAND
3 Bult Drive
Brendale | QLD | 4500
T 07 3385 3900
F 07 3385 3911
E sales.qld@wesbeam.com

SOUTH AUSTRALIA
200 Cavan Road
Dry Creek | SA | 5094
T 08 8214 8500
E sales.sa@wesbeam.com

VICTORIA
Rear | 35 Greens Road
Dandenong South | VIC | 3175
T 03 8782 9500
E sales.vic@wesbeam.com

NEW SOUTH WALES
8-24 Dunheved Circuit
St Marys | NSW | 2760
T 02 8856 8400
E sales.nsw@wesbeam.com

TECH HOTLINE
T 1300 356 460