PRODUCT OF AUSTRALIA

wesbeam
building better wood

e-splay

engineered LVL splayed beams

ewpaa CERTIFIED
AS/NZS 4357.0
Mill 613

JAS-ANZ
WWW.JAS-ANZ.ORG/REGISTER

e-splay®

Wesbeam e-splay engineered LVL, the lightweight alternative to splayed steel beams

e-splay Laminated Veneer Lumber (LVL) roof beams offer a light weight alternative to splayed steel beams. They can be used as Strutting Beams, Strutting/Counter Beams, Strutting/Hanging Beams and Counter Beams.

Due to the limitations placed on timber beam taper cuts (minimum end dimension of 90mm or 1/3 the member depth; whichever is the greater), the conventional solution has been the use of reinforced splay cut steel beams. e-splay LVL beams, by Wesbeam, now give the builder and carpenter a lightweight timber alternative to steel for these applications.

Wesbeam Solid LVL Splay Detail

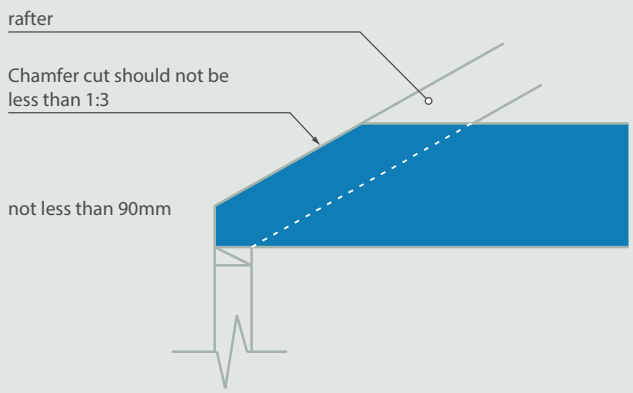

Features

100% factory manufactured — no on-site cutting required.

- e-splay beams are supplied with the splay ready cut — alleviating the need for long, potentially dangerous, splay cuts on-site.
- High strength yet lighter and safer to handle than the steel alternative.
- Chamfered edges for safer and more comfortable handling.
- Manufactured from 100% sustainably sourced pine.
- Splay cut to standardised 20° (minimum splay cut is 17.5°).

Typical e-splay Detail

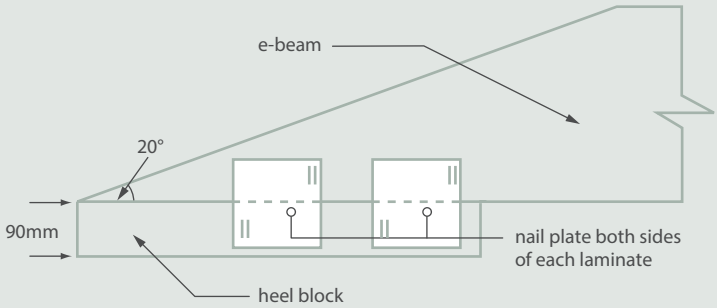

e-splay specification

e-splay span tables are engineer designed and certified to comply with AS1720.1:2010 - Timber structures, Part 1: Design methods, AS1720.3:2016 - Timber structures, Part 3: Design criteria for timber-framed residential buildings, AS1170 series - Structural design actions, and AS4055:2021 - Wind loads for housing.

e-splay is specified in the following format:

e-splay 300x45 3600

Where:

- 300x45 indicates the LVL beam sized from the span tables.
- 3600 indicates the total length of beam (beam length is available in 300mm increments).

02 STRUTTING BEAMS

SUPPORTING UNDERPURLINS ONLY

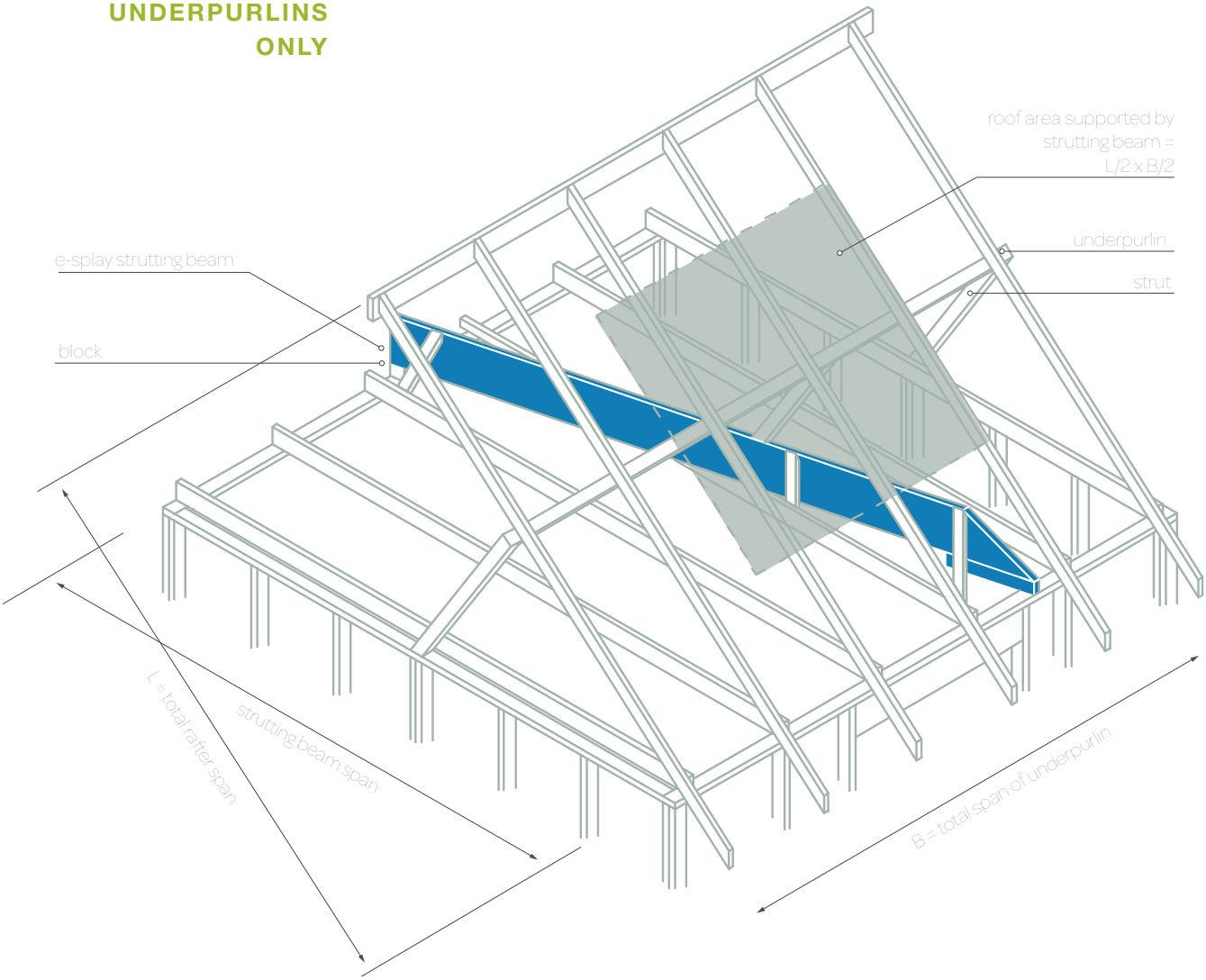

STRUTTING BEAMS

SUPPORTING UNDERPURLINS ONLY

WIND CLASSIFICATION N1, N2, N3

e-splay Section Size D X B (mm)	Roof Area Supported (m²)							
	2	3	4	5	6	7	8	10
	Maximum Span (m)							
Sheet Roof								
150 x 45	3.8	3.5	3.0	2.7	2.5	2.3	2.2	2.0
150 x 63	4.4	3.9	3.5	3.2	2.9	2.7	2.5	2.3
150 x 75	4.8	4.2	3.7	3.5	3.2	2.9	2.8	2.5
170 x 45	4.5	4.0	3.6	3.3	3.0	2.8	2.6	2.3
170 x 63	5.1	4.6	4.1	3.7	3.5	3.3	3.1	2.7
200 x 63	6.1	5.7	5.2	4.7	4.4	4.1	3.8	3.5
240 x 63	6.6	6.6	6.3	5.9	5.5	5.2	5.0	4.5
300 x 63	6.6	6.6	6.6	6.6	6.6	6.6	6.4	6.1
300 x 75	6.6	6.6	6.6	6.6	6.6	6.6	6.6	6.6
360 x 63	6.6	6.6	6.6	6.6	6.6	6.6	6.6	6.6
400 x 63	6.6	6.6	6.6	6.6	6.6	6.6	6.6	6.6
400 x 75	6.6	6.6	6.6	6.6	6.6	6.6	6.6	6.6
450 x 63	6.6	6.6	6.6	6.6	6.6	6.6	6.6	6.6
Tile Roof								
150 x 45	2.8	2.3	2.1	NS	NS	NS	NS	NS
150 x 63	3.3	2.7	2.3	2.2	1.9	NS	NS	NS
150 x 75	3.6	2.9	2.6	2.3	2.2	2.0	1.9	NS
170 x 45	3.4	2.8	2.4	2.2	2.0	1.9	NS	NS
170 x 63	3.8	3.3	2.8	2.5	2.3	2.2	2.1	1.9
200 x 63	4.9	4.1	3.6	3.3	3.0	2.8	2.6	2.3
240 x 63	6.0	5.2	4.7	4.2	3.8	3.7	3.4	3.1
300 x 63	6.6	6.6	6.2	5.8	5.3	5.0	4.7	4.2
300 x 75	6.6	6.6	6.5	6.1	5.8	5.3	5.1	4.6
360 x 63	6.6	6.6	6.6	6.6	6.5	6.3	6.0	5.5
400 x 63	6.6	6.6	6.6	6.6	6.6	6.6	6.6	6.2
400 x 75	6.6	6.6	6.6	6.6	6.6	6.6	6.6	6.6
450 x 63	6.6	6.6	6.6	6.6	6.6	6.6	6.6	6.6

1 Splay detail to one end only.
2 All sections with depth to breadth ratio greater than three must be laterally restrained against rollover at strutting points and at supports in accordance with AS1684.2:2021.
3 A minimum initial clearance of 25mm to ceiling framing member shall be provided at mid-span.
4 Bearing lengths at end supports shall not be less than 70mm.
5 e-splay roof beams can be put at an angle to the ceiling joists so as to avoid end loads falling over openings.

04 STRUTTING / COUNTER BEAMS

SUPPORTING UNDERPURLINS AND HANGING BEAMS

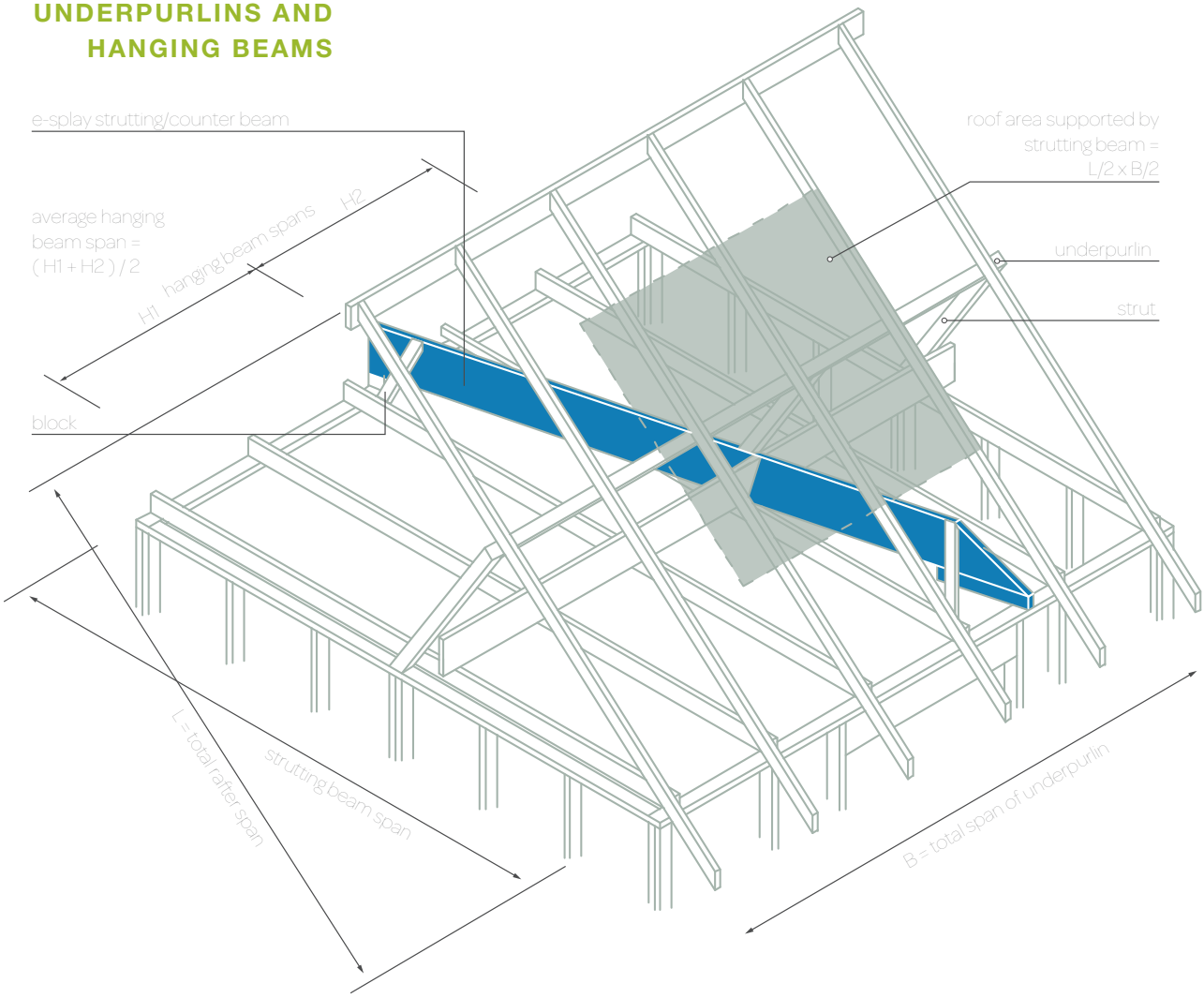

STRUTTING / COUNTER BEAMS

SUPPORTING UNDERPURLINS AND HANGING BEAMS

WIND CLASSIFICATION N1, N2, N3

e-splay Section Size D X B (mm)	Average Hanging Beam Span (m)									
	2.4					4.2				
	Roof Area Supported (m^2)									
	2	4	6	8	10	2	4	6	8	10
	Maximum Span (m)									
Maximum Span for Sheet Roof & Ceiling (m)										
170 x 63	3.8	3.4	3.1	2.8	2.5	3.5	3.1	2.9	2.6	2.4
200 x 63	4.3	4.0	3.7	3.5	3.2	4.0	3.7	3.5	3.3	3.0
240 x 63	5.0	4.6	4.3	4.1	3.9	4.6	4.3	4.1	3.9	3.7
300 x 63	5.8	5.5	5.2	5.0	4.8	5.4	5.1	4.9	4.7	4.5
300 x 75	6.0	5.7	5.5	5.2	5.0	5.6	5.3	5.1	4.9	4.8
360 x 63	6.6	6.3	6.0	5.7	5.6	6.0	5.8	5.6	5.5	5.3
400 x 63	6.6	6.6	6.5	6.3	6.0	6.5	6.3	6.1	5.9	5.5
400 x 75	6.6	6.6	6.6	6.6	6.3	6.6	6.5	6.3	6.1	6.0
450 x 63	6.6	6.6	6.6	6.6	6.6	6.6	6.6	6.6	6.6	6.5
Maximum Span for Tile Roof & Ceiling (m)										
170 x 63	3.3	2.6	2.2	2.0	1.8	3.0	2.5	2.2	2.0	1.8
200 x 63	3.9	3.3	2.8	2.5	2.2	3.6	3.1	2.7	2.4	2.2
240 x 63	4.5	3.9	3.6	3.2	2.9	4.2	3.8	3.5	3.1	2.9
300 x 63	5.4	4.8	4.4	4.1	3.9	5.1	4.6	4.3	4.0	3.8
300 x 75	5.6	5.1	4.6	4.3	4.1	5.3	4.8	4.5	4.2	4.0
360 x 63	6.2	5.6	5.2	4.9	4.6	5.7	5.4	5.0	4.7	4.5
400 x 63	6.6	6.1	5.6	5.4	5.1	6.2	5.8	5.5	5.2	4.9
400 x 75	6.6	6.4	5.9	5.6	5.4	6.5	6.0	5.7	5.5	5.2
450 x 63	6.6	6.6	6.3	5.9	5.6	6.6	6.4	6.0	5.7	5.5

1 Splay detail to one end only.
2 Average Hanging Beam Span = (H1 + H2)/2, where H1 and H2 are the spans of the hanging beams on each side of the Strutting-Counter Beam.
3 All sections with depth to breath ratio exceeding three must be restrained against rollover as per AS1684.2:2021.
4 Bearing lengths at end supports to be not less than 70mm.
5 e-splay roof beams can be put at an angle to the ceiling joists so as to avoid end loads falling over openings.

06 STRUTTING / HANGING BEAMS

SUPPORTING UNDERPURLINS AND CEILING JOISTS

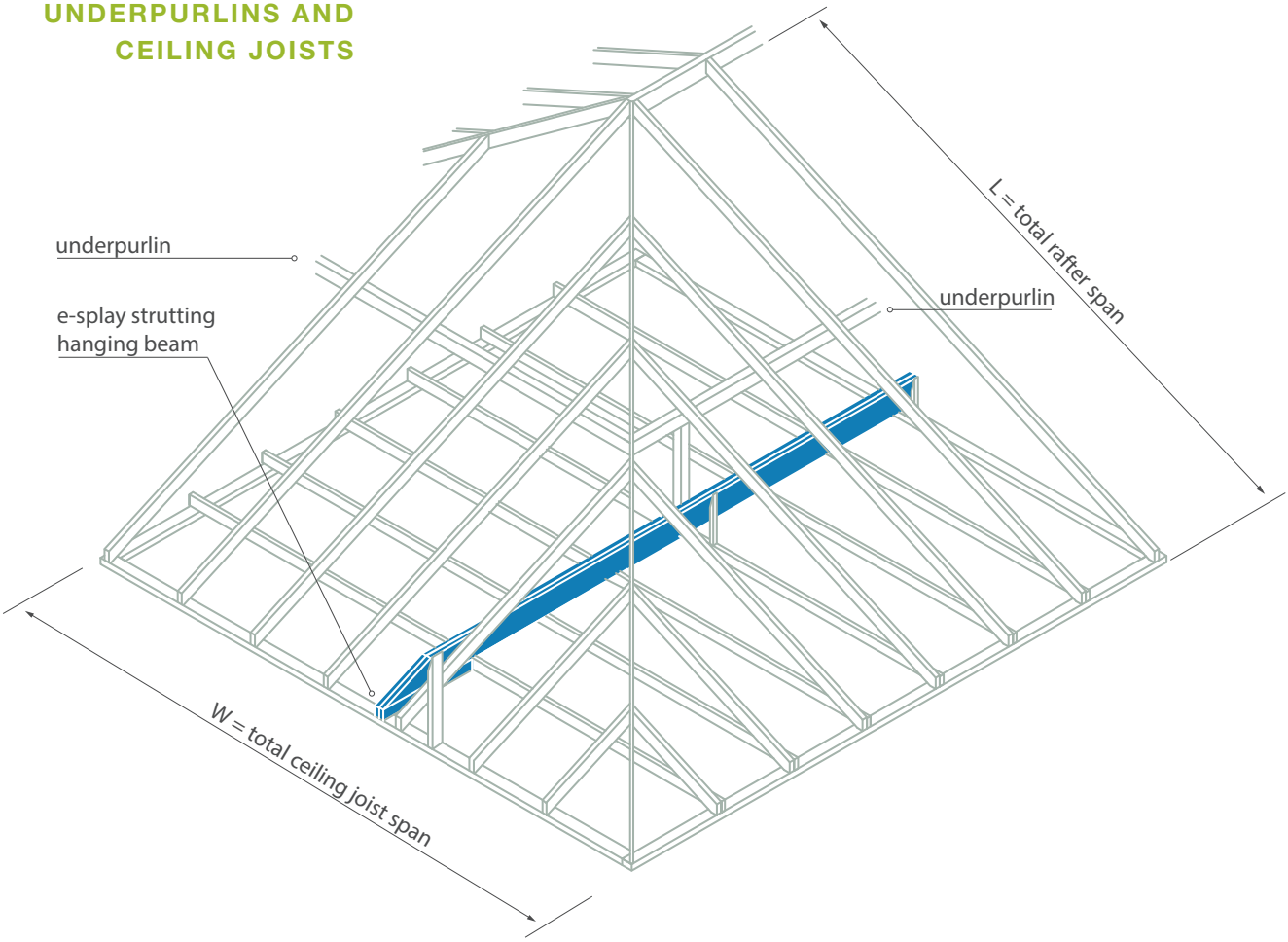

roof load width (RLW) = L/2
ceiling load width (CLW) = W/2

STRUTTING / HANGING BEAMS

SUPPORTING UNDERPURLINS
AND CEILING JOISTS

WIND CLASSIFICATION N1, N2, N3

e-splay Section Size D X B (mm)	Ceiling Load Width 'CLW (m)												
	2.4				3.0				4.2				
	Roof Load Width 'RLW' for Underpurlins (m)												
	1.8	2.4	3.0	3.6	1.8	2.4	3.0	3.6	1.8	2.4	3.0	3.6	4.2
Maximum Span for Sheet Roof & Ceiling (m)													
200 x 63	3.5	3.4	3.3	3.1	3.4	3.3	3.1	3.0	3.3	3.1	3.0	2.9	2.8
240 x 45	4.0	3.9	3.7	3.6	3.9	3.7	3.6	3.5	3.7	3.6	3.5	3.4	3.4
240 x 63	4.2	4.1	3.9	3.8	4.1	3.9	3.8	3.7	3.9	3.8	3.7	3.6	3.6
300 x 63	4.8	4.7	4.5	4.4	4.7	4.5	4.4	4.3	4.5	4.4	4.3	4.2	4.1
300 x 75	5.3	5.1	5.0	4.8	5.1	4.9	4.8	4.7	4.9	4.8	4.7	4.6	4.5
360 x 63	5.6	5.5	5.3	5.2	5.5	5.4	5.2	5.1	5.3	5.2	5.1	5.0	4.9
400 x 63	5.9	5.7	5.6	5.5	5.7	5.6	5.5	5.4	5.6	5.5	5.4	5.2	5.1
400 x 75	6.4	6.2	6.0	5.8	6.2	6.0	5.9	5.7	6.0	5.8	5.7	5.6	5.6
450 x 63	6.6	6.6	6.6	6.4	6.6	6.6	6.4	6.2	6.6	6.4	6.2	6.1	6.0
Maximum Span for Tile Roof & Ceiling (m)													
170 x 63	2.9	2.7	2.5	2.4	2.8	2.6	2.5	2.4	2.7	2.5	2.4	2.3	2.2
200 x 63	3.4	3.2	3.0	2.8	3.3	3.1	2.9	2.8	3.2	3.0	2.9	2.7	2.6
240 x 63	3.9	3.7	3.6	3.4	3.8	3.7	3.5	3.4	3.8	3.6	3.5	3.3	3.2
300 x 63	4.7	4.4	4.2	4.1	4.6	4.4	4.2	4.0	4.5	4.3	4.1	4.0	3.9
300 x 75	4.9	4.6	4.4	4.3	4.8	4.5	4.4	4.2	4.7	4.5	4.3	4.2	4.0
360 x 63	5.4	5.1	4.9	4.7	5.2	5.0	4.8	4.6	5.1	4.9	4.7	4.6	4.4
400 x 63	5.7	5.5	5.3	5.1	5.6	5.4	5.2	5.0	5.6	5.3	5.1	5.0	4.8
400 x 75	5.9	5.6	5.5	5.3	5.8	5.6	5.4	5.3	5.7	5.5	5.3	5.2	5.0
450 x 63	6.2	5.9	5.7	5.6	6.1	5.8	5.6	5.5	6.0	5.7	5.4	5.3	5.3

1 Splay detail to one end only.
2 All sections with a depth to breadth ratio exceeding three must be laterally restrained at each strutting point and at supports in accordance with AS1684.2:2021.
3 Roof Load Width 'RLW' for the underpurlin is the average of the rafter spans either side of the underpurlin supported by the Strutting-Hanging Beam.
4 Underpurlin span assumed to be one-half of the Strutting-Hanging Beam span.
5 Ceiling Load Width 'CLW' is the average of the ceiling joist spans either side of the Strutting-Hanging Beam.
6 Bearing lengths at end supports to be not less than 70mm.
7 e-splay roof beams can be put at an angle to the ceiling joists so as to avoid end loads falling over openings.

08 COUNTER BEAMS

SUPPORTING HANGING BEAMS

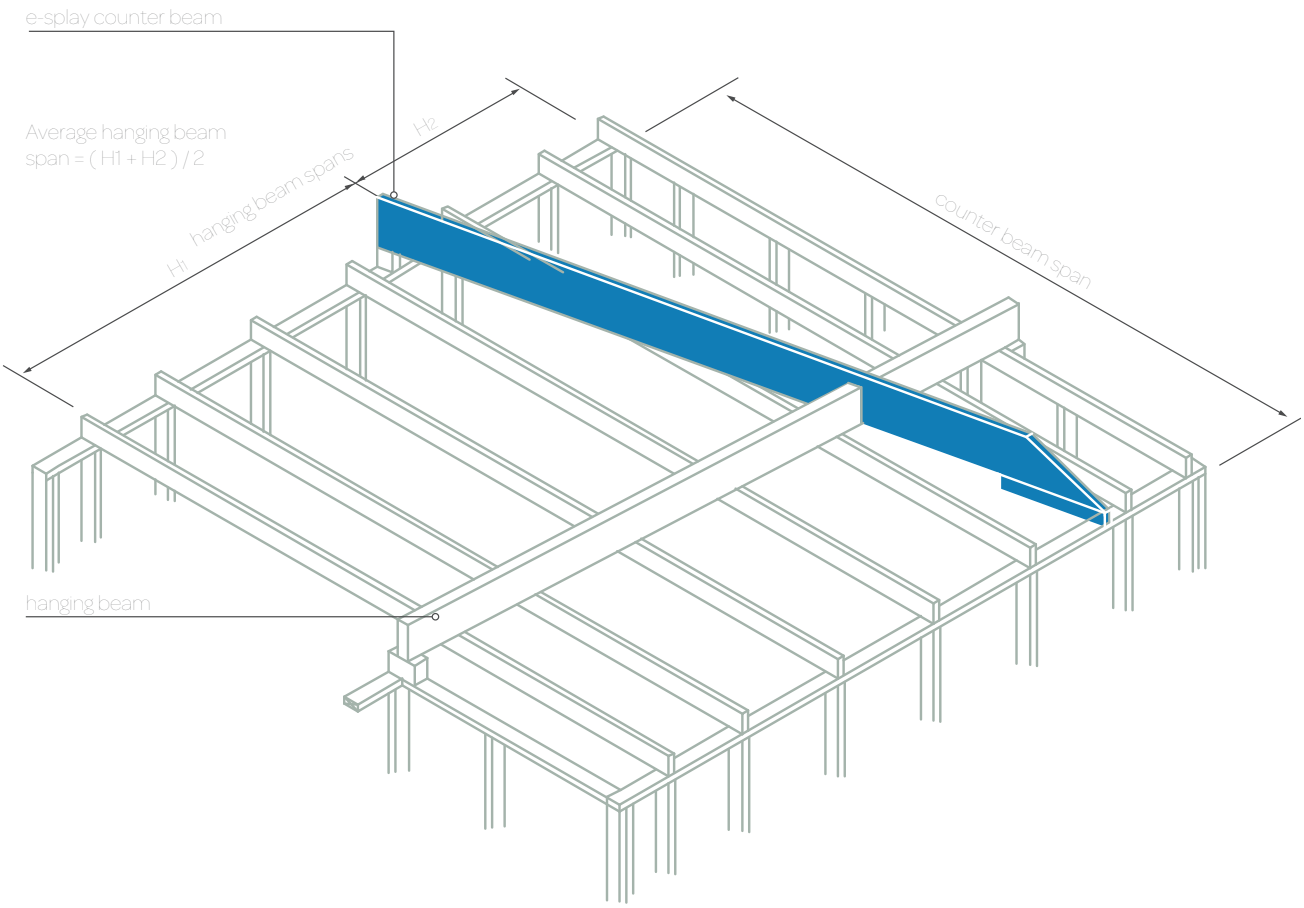

WIND CLASSIFICATION N1, N2, N3

COUNTER BEAMS

SUPPORTING HANGING BEAMS

LIMITS ON DEFLECTION
PERMANENT LOAD span/300 or 15mm max
IMPOSED LOAD span/300 or 15mm max

e-splay Section Size D X B (mm)	Average Hanging Beam Span (m)							
	2.4	3	3.6	4.2	4.8	5.4	6	6.6
	Maximum Span (m)							
150 x 35	3.2	3.0	2.8	2.7	2.6	2.5	2.4	2.3
150 x 45	3.5	3.2	3.1	2.9	2.8	2.7	2.6	2.5
170 x 35	3.7	3.4	3.2	3.1	2.9	2.8	2.6	2.5
170 x 45	4.0	3.7	3.5	3.3	3.2	3.0	2.9	2.8
200 x 35	4.2	3.9	3.6	3.4	3.3	3.0	2.9	2.8
200 x 45	4.6	4.3	4.1	3.9	3.7	3.6	3.5	3.4
200 x 63	4.9	4.7	4.5	4.3	4.2	4.0	3.9	3.8
240 x 35	4.6	4.2	3.9	3.8	3.6	3.4	3.3	3.2
240 x 45	5.2	5.0	4.8	4.6	4.4	4.1	4.0	3.9
240 x 63	5.6	5.4	5.1	5.0	4.8	4.7	4.6	4.5
300 x 45	6.1	5.7	5.4	5.1	4.9	4.6	4.5	4.4
300 x 63	6.5	6.2	6.0	5.8	5.6	5.5	5.4	5.3
300 x 75	6.6	6.4	6.2	6.0	5.8	5.7	5.6	5.5
360 x 63	6.6	6.6	6.6	6.6	6.4	6.2	6.1	6.0
400 x 63	6.6	6.6	6.6	6.6	6.6	6.6	6.6	6.5
400 x 75	6.6	6.6	6.6	6.6	6.6	6.6	6.6	6.6
450 x 63	6.6	6.6	6.6	6.6	6.6	6.6	6.6	6.6

1 Splay detail to one end only.
2 Average Hanging Beam Span = (H1 + H2)/2, where H1 and H2 are the spans of the hanging beams on each side of the Counter Beam.
3 Bearing lengths at end supports to be not less than 70mm.
4 e-splay counter beams can be put at an angle to the ceiling joists so as to avoid end loads falling over openings.

SPECIFICATIONS

Manufacture

Manufactured in accordance with AS/NZS 4357

Veneer

Thickness	Constant through the product thickness
Species	Sustainably sourced timber
Joints	Outer 2 plies are scarf jointed Inner plies – scarf and/or butt jointed

Moisture Content

8% – 15% (at time of dispatch)

Dimensional Tolerances

Available on request

Straightness

Available on request

Density

650kg/m^3 (approximately)

Adhesive

Phenolic – AS2754.1:2016 - Adhesives for timber and timber products; Adhesives for manufacture of plywood and laminated veneer lumber (LVL)

Bond

Type A – AS/NZS2098.2:2012 - Methods of tests for veneer and plywood; Bond quality of plywood (chisel test)

Joint Group

JD3 – for nails, bolts and screws unless noted otherwise

Finish

Unsanded faces, sawn edges and arrised edges

Branding

Each piece of Wesbeam LVL is branded at least once with the product name for identification and evidence of compliance with manufacturing control standards

Storage

Store on level bearers at maximum 1800mm centres well clear of the ground, and cover to keep dry but allow ventilation

Source

Sustainably sourced timber certified to AS4707 - Chain of custody for forest products PEFC

Treatment Condition

Untreated – but can be specified to e2S*, H2 and H3 Treatment levels

*e2S is a CodeMark® certified glue-line termite treatment.

wesbeam
building better wood

© Wesbeam Pty Limited
ABN 89 004 268 017
WESB0816 July 2026

WESTERN AUSTRALIA
190 Pederick Road
Neerabup | WA | 6031
E sales@wesbeam.com

QUEENSLAND
3 Bult Drive
Brendale | QLD | 4500
E sales.qld@wesbeam.com

SOUTH AUSTRALIA
200 Cavan Road
Dry Creek | SA | 5094
E sales@wesbeam.com

VICTORIA
Rear | 35 Greens Road
Dandenong South | VIC | 3175
E sales.vic@wesbeam.com

NEW SOUTH WALES
8-24 Dunheved Circuit
St Marys | NSW | 2760
E sales.nsw@wesbeam.com

TECH HOTLINE
T 1300 356 460